Acta Cryst. (1976). B32, 120

Topography of Cyclodextrin Inclusion Complexes. VI.* The Crystal and Molecular Structure of α-Cyclodextrin–*p*-Iodoaniline Trihydrate

BY W. SAENGER, K. BEYER† AND P. C. MANOR‡

Abteilung Chemie, Max-Planck-Institut für experimentelle Medizin, 34 *Göttingen, Hermann-Rein-Str.* 3, *Germany (BRD)*

(*Received* 1 *May* 1975; *accepted* 17 *May* 1975)

The α-cyclodextrin–*p*-iodoaniline trihydrate complex crystallizes in a novel cage-type structure with the α-CD molecules arranged face-to-face, opposite to each other. The space group is $P2_12_12_1$ with $a=24{\cdot}569$ (6), $b=13{\cdot}681$ (3), $c=15{\cdot}475$ (4) Å. The structure was solved by Patterson and tangent formula techniques and refined to $R=5{\cdot}5\%$ for 4306 diffractometer-measured intensities. As in other α-CD inclusion complexes, the glucoses assume a *C*1 chair conformation, the orientation about the C(5)–C(6) bonds is *gauche*, *gauche* and one O(6) hydroxyl group is twofold disordered. The *p*-iodoaniline molecule is located within the α-CD cavity so that the hydrophobic I atom is in the hydrophobic pocket and the amino group protrudes from the O(2), O(3) side of the ring by about 1·6 Å. The substrate molecule is not hydrogen bonded to the O(6) hydroxyl group of the including α-CD molecule, in contrast to other substrates with hydrogen-bonding groups. Owing to the introduction of the aromatic guest molecule, the α-CD ring assumes an elliptical form with the three O(4)···O(4) diagonals at 8·842, 8·458, 8·163 Å. From distance criteria, a ring of six O(2)···O(3) interglucosidic hydrogen bonds appears possible.

Introduction

When starch is degraded by *Bacillus macerans* amylase, a family of cyclic molecules composed of six to ten α (1 → 4) linked glucoses is obtained. α-Cyclodextrin (α-CD, cyclohexaamylose), the smallest of these molecules, has a 5·0 Å wide annular aperture and is able to form inclusion complexes in aqueous solution (Cramer, 1954; French, 1957; Griffiths & Bender, 1973; Saenger, 1975). Recently complexes with water (Manor & Saenger, 1974), iodine (McMullan, Saenger, Fayos & Mootz, 1973*a*), propan-1-ol (Saenger, McMullan, Fayos & Mootz, 1974), krypton (Saenger & Noltemeyer, 1974), methanol (Hingerty & Saenger, 1975), butyric acid (Saenger & Beyer, 1975), polyiodide (Noltemeyer & Saenger, 1975) have been investigated. In the water complex which corresponds to the 'empty' α-CD molecule in aqueous solution an unsymmetrical, distorted conformation of α-CD with high potential energy was found while in all the other complexes the α-CD molecule assumes an almost hexagonal, unstrained conformation. This finding led to the proposal of a mechanism for α-CD inclusion formation which might play a role when intermolecular interactions in biological systems are involved (Manor & Saenger, 1974; Saenger & Noltemeyer, 1974; Saenger, 1975).

It was of interest to study the interaction between α-CD and a molecule of larger dimensions like *p*-iodoaniline. When the X-ray structural work on the α-CD–*p*-iodoaniline complex was completed, it came to our notice that Japanese workers had carried out the same study and had published a short communication (Harata & Uedaira, 1975). In the following we therefore limit ourselves to describing mainly the α-CD –*p*-iodoaniline complex structure in relation to the other α-CD complex structures which have been evaluated so far.

Methods and results

α-CD and *p*-iodoaniline were co-crystallized by slow cooling of a hot aqueous solution. The colourless, plate-like crystals were sealed in quartz capillaries. The crystals are orthorhombic, space group $P2_12_12_1$; cell constants and further details are given in Table 1. 4306 intensities were collected from a crystal, $0{\cdot}2\times0{\cdot}5\times0{\cdot}3$ mm, on a Stoe four-circle automated diffractometer equipped with a Cu tube. The reflexions were scanned in the $2\theta/\omega$ mode with stationary background measurements on both sides of each scan. Every 100 reflexions three standard reflexions were monitored; their intensity fluctuations were within 5% of the initial intensity measurement. The data were corrected for Lorentz and polarization effects and for absorption (North, Phillips & Matthews, 1965). As the crystal was mounted with **b** (the longest crystal dimension) parallel to the φ-axis of the goniometer, reflexion 020 was used to record the absorption as a function of φ and the data were corrected accordingly.

* Part V: *α-Cyclodextrin Inclusion Complexes. Mechanism of Adduct Formation and Intermolecular Interactions* (Saenger, 1975).

† Part of the Ph. D. thesis by K. Beyer, Universität Göttingen, 1975.

‡ Present address: Department of Chemistry, Princeton University, Princeton, N.J. 08540, U.S.A.

Table 1. *Crystallographic data for the α-CD–p-iodoaniline trihydrate complex*

Chemical formula: $(C_6H_{10}O_5)_6.C_6H_6NI.3H_2O$
$M=1246$
Space group, $P2_12_12_1$
a = 24·569 (6) Å
b = 13·681 (3)
c = 15·475 (4)
$V_c=5201·6$ Å^3
Volume per inclusion complex unit = 1300 Å^3
[for definition, see McMullan *et al.* (1973*b*)]
Wavelength: Ni-filtered Cu $K\alpha=1·54182$ Å
$\varrho_o=1·61$ (flotation)
$\varrho_c=1·59$ g cm^{-3} for $Z=4$

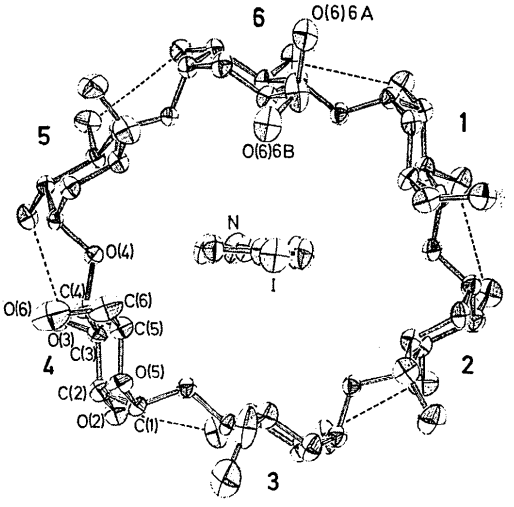

(*a*)

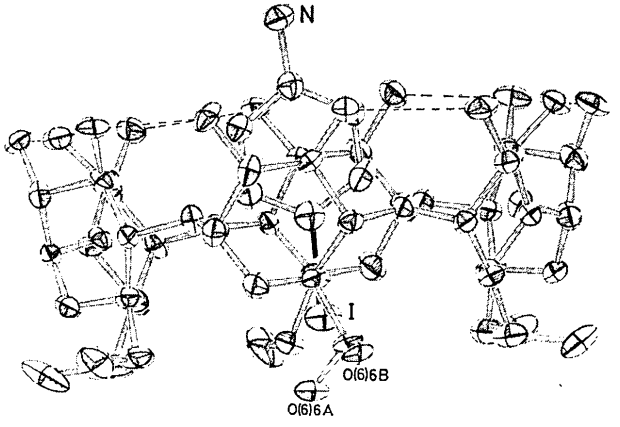

(*b*)

Fig. 1. Two views of the α-CD–*p*-iodoaniline complex. Hydrogen bonds are drawn as broken lines. The numbers refer to the glucose numbering used in the text. For atom designation, see Fig. 2. The atoms are drawn with their 50% probability ellipsoids (Johnson, 1965).

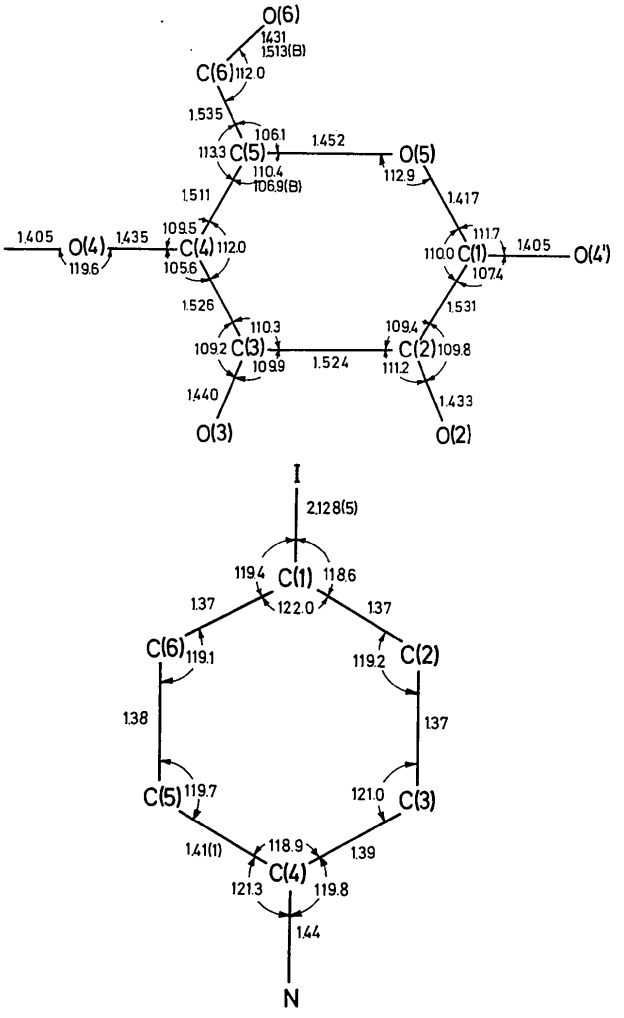

Fig. 2. Bond lengths and distances for the *p*-iodoaniline molecule and a glucose unit. The glucose data were obtained by averaging over the six α-CD glucoses. Standard deviations are 0·008 Å for distances and 0·8° for angles; data involving the I atom are accurate to 0·003 Å and 0·4°.

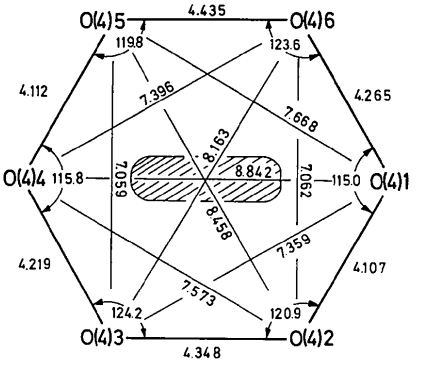

Fig. 3. The geometry of the hexagon formed by the O(4) atoms. The elliptical distortion of the hexagon clearly follows the insertion of the benzene ring which is indicated by hatching.

The structure was solved by a combination of Patterson and tangent-formula refinement techniques. As the I atom is located nearly on the *ac* plane and the whole structure is almost symmetrical with respect to this plane, the main problem was initially to resolve image and mirror image. The final breakthrough was achieved when tangent formula refinement was employed (Main, Germain & Woolfson, 1970). The atomic parameters were refined by full-matrix least-squares techniques (Busing, Martin & Levy, 1962); hydrate water molecules were located from difference syntheses. In the refinement anomalous scattering of the I atom was taken into consideration. In the last cycle, positions of H atoms which could be calculated on the basis of C and O atoms were introduced; hydroxyl H atoms were not located. The final R, after correction of the low-order data for secondary extinction (Stout & Jensen, 1968), is 5·5% for all 4306 data.

Final atomic parameters and their standard deviations as derived from the diagonal elements of the least-squares correlation matrix are given in Table 2. Fig. 1 shows two views of the complex. Table 3 contains a list of observed and calculated structure factors,* Tables 4 to 6 and Figs. 2 to 7 give results necessary to describe structural details of the α-CD–*p*-iodoaniline complex.

Discussion

The atom numbering is the same as used in previous publications: C(5)3 means carbon atom 5 of glucose number 3. Glucose numbering is indicated in Fig. 1.

(*a*) *Glucose units*

Bond angles and distances averaged from the six glucoses are presented in Fig. 2. Comparison with data obtained from α-CD molecules in other structures shows in general good agreement, As discussed previ-

* Table 3 has been deposited with the British Library Lending Division as Supplementary Publication No. SUP 31135 (25 pp., 1 microfiche). Copies may be obtained through The Executive Secretary, International Union of Crystallography, 13 White Friars, Chester CH1 1NZ, England.

Table 2. *Fractional atomic coordinates* ($\times 10^4$) *and anisotropic temperature factors*

$T=\exp[-\frac{1}{4}(h^2B_{11}a^{*2}+k^2B_{22}b^{*2}+l^2B_{33}c^{*2}+2hkB_{12}a^*b^*+2hlB_{13}a^*c^*+2klB_{23}b^*c^*)]$. Occupancies for disordered atoms are: O(6)6*A*, 0·60; O(6)6*B*, 0·40; O*W*3*A*, 0·50; O*W*3*B*, 0·39.

	x	y	z	B_{11}	B_{22}	B_{33}	B_{12}	B_{13}	B_{23}
C(1)	0·1083 (3)	0·0051 (7)	0·4562 (5)	14 (2)	55 (5)	33 (4)	1 (3)	0 (2)	−1 (5)
C(2)	0·0558 (3)	0·0100 (7)	0·4258 (5)	11 (1)	60 (6)	42 (4)	0 (3)	2 (2)	−7 (5)
C(3)	0·0469 (3)	0·0096 (8)	0·3387 (5)	11 (1)	67 (6)	29 (4)	7 (3)	0 (2)	3 (5)
C(4)	0·0899 (3)	0·0079 (7)	0·2809 (5)	10 (1)	42 (5)	31 (3)	3 (3)	0 (2)	−2 (4)
C(5)	0·1436 (3)	0·0052 (8)	0·3133 (5)	9 (1)	79 (6)	28 (3)	2 (3)	2 (2)	−1 (5)
C(6)	0·1522 (3)	0·0012 (8)	0·4016 (5)	10 (1)	72 (6)	42 (4)	1 (3)	−6 (2)	−4 (6)
N	0·0793 (3)	0·0119 (6)	0·1891 (4)	14 (1)	71 (5)	24 (3)	6 (2)	−2 (2)	1 (4)
I	0·1211 (0)	−0·0014 (1)	0·5920 (0)	21 (0)	86 (0)	29 (0)	1 (0)	−1 (0)	−2 (0)
O*W*1	0·2496 (3)	0·5009 (6)	0·0982 (5)	20 (1)	80 (5)	83 (4)	13 (2)	12 (2)	21 (6)
O*W*2	0·4630 (3)	−0·0042 (6)	0·3506 (5)	28 (2)	81 (5)	115 (6)	7 (3)	−1 (3)	18 (6)
O*W*3*A*	0·3263 (5)	0·4725 (10)	0·2369 (8)	26 (3)	90 (11)	62 (7)	−1 (5)	−7 (4)	−5 (8)
O*W*3*B*	0·2884 (7)	−0·4911 (14)	0·3136 (13)	32 (4)	68 (12)	109 (13)	18 (7)	−20 (7)	12 (13)
C(1)1	0·2420 (3)	0·2984 (6)	0·4597 (5)	10 (1)	37 (5)	23 (4)	0 (2)	−2 (2)	3 (4)
C(2)1	0·2765 (3)	0·2752 (6)	0·3789 (5)	10 (1)	41 (5)	21 (4)	−1 (2)	0 (2)	2 (4)
C(3)1	0·2796 (3)	0·1649 (6)	0·3659 (5)	10 (1)	45 (5)	21 (4)	1 (2)	3 (2)	3 (4)
C(4)1	0·2968 (3)	0·1134 (6)	0·4495 (5)	8 (1)	40 (5)	20 (3)	0 (2)	1 (2)	0 (4)
C(5)1	0·2624 (3)	0·1461 (6)	0·5260 (5)	10 (1)	39 (5)	21 (4)	5 (2)	0 (2)	1 (4)
C(6)1	0·2817 (4)	0·1061 (7)	0·6127 (5)	19 (2)	49 (6)	22 (4)	3 (3)	−1 (2)	2 (4)
O(2)1	0·2536 (2)	0·3235 (4)	0·3055 (3)	16 (1)	58 (4)	22 (2)	5 (2)	−1 (1)	10 (3)
O(3)1	0·3170 (2)	0·1408 (4)	0·2973 (3)	14 (1)	64 (4)	22 (2)	6 (2)	6 (1)	0 (3)
O(4)1	0·2882 (2)	0·0120 (4)	0·4350 (3)	9 (1)	37 (3)	30 (2)	0 (1)	−2 (1)	0 (3)
O(5)1	0·2646 (2)	0·2522 (4)	0·5329 (3)	10 (1)	46 (3)	17 (2)	−1 (1)	−2 (1)	−1 (3)
O(6)1	0·3409 (3)	0·1138 (5)	0·6202 (4)	20 (1)	55 (4)	40 (3)	0 (2)	−15 (2)	4 (3)
C(1)2	0·3300 (3)	−0·0556 (6)	0·4512 (6)	9 (2)	40 (5)	31 (4)	1 (2)	2 (2)	1 (4)
C(2)2	0·3334 (3)	−0·1218 (6)	0·3726 (5)	12 (2)	41 (5)	31 (4)	3 (2)	4 (2)	−1 (4)
C(3)2	0·2771 (3)	−0·1703 (6)	0·3607 (5)	12 (1)	41 (5)	16 (3)	3 (2)	1 (2)	−2 (3)
C(4)2	0·2612 (3)	−0·2223 (6)	0·4448 (5)	11 (1)	40 (5)	18 (3)	2 (2)	1 (2)	0 (3)
C(5)2	0·2664 (3)	−0·1601 (6)	0·5241 (5)	9 (1)	41 (5)	21 (3)	2 (2)	0 (2)	−4 (4)
C(6)2	0·2619 (4)	−0·2185 (7)	0·6078 (6)	17 (2)	56 (6)	25 (4)	−1 (3)	1 (2)	2 (4)
O(2)2	0·3489 (2)	−0·0684 (4)	0·2984 (3)	18 (1)	62 (4)	22 (2)	−1 (2)	9 (1)	5 (3)
O(3)2	0·2802 (2)	−0·2417 (4)	0·2915 (3)	21 (1)	53 (4)	20 (2)	2 (2)	4 (1)	−13 (3)
O(4)2	0·2046 (2)	−0·2479 (4)	0·4353 (3)	8 (1)	36 (3)	27 (2)	0 (1)	−1 (1)	−2 (2)
O(5)2	0·3190 (2)	−0·1102 (4)	0·5257 (3)	9 (1)	50 (3)	20 (2)	0 (2)	−2 (1)	4 (2)
O(6)2	0·2897 (3)	−0·3091 (5)	0·6039 (4)	20 (1)	70 (4)	41 (3)	8 (2)	−4 (2)	18 (3)
C(1)3	0·1886 (3)	−0·3449 (6)	0·4419 (5)	10 (1)	33 (4)	31 (4)	2 (2)	4 (2)	2 (4)
C(2)3	0·1500 (3)	−0·3682 (6)	0·3679 (5)	10 (1)	49 (6)	29 (4)	0 (2)	5 (2)	−9 (4)
C(3)3	0·0984 (3)	−0·3086 (6)	0·3770 (5)	9 (1)	56 (6)	15 (3)	−2 (2)	1 (2)	−2 (4)
C(4)3	0·0733 (3)	−0·3235 (5)	0·4662 (5)	8 (1)	36 (4)	22 (3)	3 (2)	3 (2)	0 (3)

Table 2 (*cont.*)

	x	y	z	B_{11}	B_{22}	B_{33}	B_{12}	B_{13}	B_{23}
C(5)3	0·1144 (3)	−0·3057 (6)	0·5358 (5)	13 (2)	53 (5)	22 (4)	2 (3)	3 (2)	2 (4)
C(6)3	0·0928 (4)	−0·3284 (10)	0·6278 (6)	13 (2)	135 (12)	21 (4)	9 (4)	3 (2)	6 (6)
O(2)3	0·1781 (2)	−0·3443 (5)	0·2888 (4)	11 (1)	89 (5)	29 (3)	−7 (2)	5 (1)	−22 (3)
O(3)3	0·0610 (2)	−0·3383 (4)	0·3112 (3)	13 (1)	72 (4)	17 (2)	−5 (2)	0 (1)	−11 (3)
O(4)3	0·0291 (2)	−0·2552 (4)	0·4737 (3)	9 (1)	33 (3)	27 (2)	2 (1)	3 (1)	1 (2)
O(5)3	0·1620 (2)	−0·3645 (4)	0·5223 (3)	12 (1)	57 (4)	31 (3)	5 (2)	5 (1)	12 (3)
O(6)3	0·0720 (3)	−0·4243 (6)	0·6346 (5)	22 (2)	110 (7)	65 (5)	3 (3)	18 (2)	54 (5)
C(1)4	−0·0231 (3)	−0·2906 (6)	0·4969 (5)	10 (1)	33 (5)	30 (4)	0 (2)	6 (2)	−7 (4)
C(2)4	−0·0628 (3)	−0·2622 (6)	0·4253 (5)	10 (1)	38 (5)	27 (4)	0 (2)	4 (2)	−8 (4)
C(3)4	−0·0655 (3)	−0·1529 (5)	0·4153 (5)	10 (1)	28 (4)	26 (3)	0 (2)	−1 (2)	−4 (3)
C(4)4	−0·0788 (3)	−0·1071 (5)	0·5024 (5)	10 (1)	27 (4)	15 (3)	2 (2)	3 (2)	−1 (3)
C(5)4	−0·0405 (3)	−0·1422 (6)	0·5729 (5)	13 (1)	38 (5)	21 (4)	2 (2)	3 (2)	2 (4)
C(6)4	−0·0574 (4)	−0·1059 (7)	0·6635 (5)	28 (2)	53 (7)	21 (4)	9 (3)	3 (2)	−7 (4)
O(2)4	−0·0451 (2)	−0·3040 (4)	0·3438 (4)	13 (1)	50 (4)	26 (3)	0 (2)	3 (1)	−12 (3)
O(3)4	−0·1072 (2)	−0·1251 (4)	0·3562 (3)	15 (1)	48 (4)	20 (3)	3 (2)	−2 (1)	−2 (3)
O(4)4	−0·0702 (2)	−0·0045 (4)	0·4915 (3)	8 (1)	28 (3)	20 (2)	1 (2)	3 (1)	8 (3)
O(5)4	−0·0408 (2)	−0·2489 (4)	0·5765 (3)	15 (1)	35 (3)	22 (3)	4 (2)	7 (1)	10 (3)
O(6)4	−0·1149 (3)	−0·1201 (5)	0·6776 (4)	35 (2)	67 (5)	38 (3)	11 (3)	24 (2)	9 (3)
C(1)5	−0·1120 (3)	0·0623 (5)	0·5129 (5)	6 (1)	32 (4)	20 (3)	0 (2)	2 (2)	3 (3)
C(2)5	−0·1224 (3)	0·1257 (5)	0·4332 (5)	7 (1)	31 (4)	29 (3)	0 (2)	1 (2)	3 (3)
C(3)5	−0·0694 (3)	0·1784 (5)	0·4109 (5)	9 (1)	30 (4)	19 (3)	−1 (2)	3 (2)	5 (3)
C(4)5	−0·0464 (3)	0·2331 (5)	0·4878 (4)	7 (1)	36 (5)	20 (3)	0 (2)	1 (2)	4 (3)
C(5)5	−0·0455 (3)	0·1721 (5)	0·5704 (4)	10 (1)	37 (4)	17 (3)	−2 (2)	0 (2)	−2 (3)
C(6)5	−0·0370 (3)	0·2318 (7)	0·6518 (5)	17 (2)	61 (6)	20 (3)	−3 (3)	−2 (2)	−11 (4)
O(2)5	−0·1413 (2)	0·0668 (4)	0·3622 (3)	10 (1)	46 (4)	20 (2)	−2 (2)	−5 (1)	0 (3)
O(3)5	−0·0782 (2)	0·2474 (4)	0·3411 (3)	17 (1)	38 (3)	18 (2)	0 (2)	0 (1)	10 (2)
O(4)5	0·0082 (2)	0·2589 (4)	0·4629 (3)	8 (1)	26 (3)	30 (3)	0 (1)	2 (1)	−1 (3)
O(5)5	−0·0965 (2)	0·1220 (4)	0·5836 (3)	11 (1)	39 (3)	18 (2)	0 (2)	4 (1)	0 (2)
O(6)5	−0·0730 (3)	0·3128 (5)	0·6586 (4)	21 (1)	50 (4)	43 (3)	2 (2)	6 (2)	−16 (3)
C(1)6	0·0272 (3)	0·3528 (6)	0·4799 (5)	9 (1)	35 (5)	32 (3)	0 (2)	0 (2)	−2 (3)
C(2)6	0·0560 (3)	0·3870 (5)	0·3963 (5)	8 (1)	32 (4)	38 (4)	0 (2)	−2 (2)	2 (4)
C(3)6	0·1082 (3)	0·3283 (6)	0·3817 (5)	10 (1)	36 (5)	20 (3)	1 (2)	−4 (2)	2 (3)
C(4)6	0·1436 (3)	0·3310 (5)	0·4628 (5)	10 (1)	36 (4)	22 (3)	1 (2)	−1 (2)	−6 (3)
C(5)6	0·1116 (3)	0·2962 (5)	0·5393 (4)	11 (1)	44 (4)	15 (3)	2 (2)	−3 (2)	−1 (3)
C(6)6	0·1427 (4)	0·3062 (8)	0·6259 (5)	13 (2)	116 (10)	15 (3)	−6 (4)	−4 (2)	−11 (5)
O(2)6	0·0199 (2)	0·3821 (4)	0·3247 (4)	12 (1)	45 (4)	34 (3)	0 (2)	−8 (2)	15 (3)
O(3)6	0·1376 (2)	0·3704 (5)	0·3105 (4)	11 (1)	65 (5)	25 (3)	0 (2)	0 (1)	11 (3)
O(4)6	0·1884 (2)	0·2670 (4)	0·4426 (3)	8 (1)	35 (3)	25 (2)	0 (1)	0 (1)	−5 (2)
O(5)6	0·0635 (2)	0·3562 (4)	0·5507 (4)	10 (1)	47 (4)	27 (3)	2 (2)	2 (1)	−13 (3)
O(6)6*A*	0·1125 (4)	0·2457 (8)	0·6922 (5)	18 (2)	93 (8)	15 (4)	3 (4)	0 (2)	0 (4)
O(6)6*B*	0·1512 (5)	0·4143 (10)	0·6413 (8)	15 (3)	76 (10)	21 (6)	0 (5)	−5 (3)	−22 (7)

Table 4. *Endocyclic and exocyclic dihedral angles A–B–C–D in the six glucoses*

These angles are defined as 0° when the bonds *A–B* and *C–D* are *cis*-planar and are counted positive when the far bond rotates clockwise with respect to the near bond. The variations are (|maximum value–minimum value|).

Angle	Glucose unit 1	2	3	4	5	6	Variation	Average values
Endocyclic								
C(1)–C(2) –C(3) –C(4)	−55·6	−55·0	−53·8	−54·1	−53·0	−52·3	3·3	−54·0
C(2)–C(3) –C(4) –C(5)	50·5	50·2	52·2	52·1	46·9	55·0	5·3	51·2
C(3)–C(4) –C(5) –O(5)	−54·8	−47·8	−54·1	−54·7	−46·3	−58·0	11·7	−52·6
C(4)–C(5) –O(5)–C(1)	63·0	54·3	60·3	60·5	55·8	61·6	8·7	59·3
C(5)–O(5)–C(1) –C(2)	−64·8	−63·2	−61·7	−62·9	−64·3	−58·9	5·9	−62·6
O(5)–C(1) –C(2) –C(3)	57·7	62·6	57·7	60·0	61·1	53·8	8·8	58·8
Exocyclic								
C(5)–C(5) –C(6) –O(6)	−76·2	−81·4	−68·1	−74·0	−71·5	74·6 (*A*) −55·0 (*B*)	13·3	−74·3†
C(4)–C(5) –C(6) –O(6)	44·1	40·9	54·7	46·5	50·6	−165·7 (*A*) 64·8 (*B*)	13·8	47·4†
C(2)–C(1) –O(4′)–C(4′)*	−133·6	−132·1	−133·9	−121·9	−125·4	−134·7	12·0	−130·3
O(5)–C(1) –O(4′)–C(4′)*	105·2	107·2	105·3	118·3	114·6	104·3	14·0	109·2
C(1)–O(4′)–C(4′)–C(3′)*	132·8	128·6	122·0	126·6	126·4	135·7	13·7	128·7
C(1)–O(4′)–C(4′)–C(5′)*	−108·2	−111·3	−115·5	−112·8	−113·8	−102·2	13·3	−110·6
O(2)–C(2) –C(3) –O(3)	65·3	63·9	67·0	66·5	64·2	63·6	3·4	65·1

* Primed atoms belong to adjacent glucose. † Glucose 6 omitted from averaging.

Table 5. *Deviations* (Å) *of atoms from the least-squares planes defined by* C(2), C(3), C(5) *and* O(5)

Glucose number	C(1)	C(2)	C(3)	C(4)	C(5)	O(5)	O(4)
1	−0·641	−0·027	0·025	0·597	−0·027	0·029	0·378
2	−0·665	0·017	−0·017	0·563	0·017	−0·018	0·262
3	−0·664	−0·009	0·009	0·623	−0·009	0·010	0·445
4	−0·592	−0·011	0·010	0·546	−0·010	0·011	0·336
5	−0·659	0·002	−0·002	0·531	0·002	−0·002	0·200
6	0·618	−0·015	0·015	0·647	−0·016	0·016	0·516
Average	−0·640			0·585			0·356
variation	0·073			0·116			0·316
(definition see legend Table 4)							

Table 6. *Deviations of atoms* (Å) *from the least-squares planes*

Atoms which define the planes are marked with an asterisk.

(*a*) Six O(4) atoms

$$0{\cdot}0355x+0{\cdot}0037y+0{\cdot}9994z-2{\cdot}5941=0$$

*O(4)1	0·038	I	2·125
*O(4)2	−0·046	N	−1·490
*O(4)3	0·010		
*O(4)4	0·034		
*O(4)5	−0·041		
*O(4)6	0·006		

(*b*) Four O(4) atoms

$$0{\cdot}0985x+0{\cdot}0132y+0{\cdot}9951z-7{\cdot}3585=0$$

*O(4)2	0·039	O(4)1	−0·205
*O(4)3	−0·039	O(4)4	−0·164
*O(4)4	0·039	I	2·051
*O(4)	−0·039		

(*c*) Twelve O(2) and O(3) atoms

$$0{\cdot}0302x-0{\cdot}0040y+0{\cdot}9995z-1{\cdot}8225=0$$

*O(2)1	0·020	*O(2)4	0·042
*O(3)1	0·032	*O(3)4	0·054
*O(2)2	0·074	*O(2)5	0·051
*O(3)2	−0·006	*O(3)5	−0·027
*O(2)3	−0·091	*O(2)6	−0·051
*O(3)3	−0·056	*O(3)6	−0·041
		I	2·882
		N	−1·664

(*d*) Benzene ring of *p*-iodoaniline

$$0{\cdot}0393x-0{\cdot}9989y+0{\cdot}0253z-0{\cdot}2363=0$$

*C(1)	0·002	I	−0·057
*C(2)	0·013	N	0·030
*C(3)	−0·013		
*C(4)	−0·002		
*C(5)	0·017		
*C(6)	−0·017		

The angle between this plane and the plane through the six α-CD O(4) atoms is 88·5°.

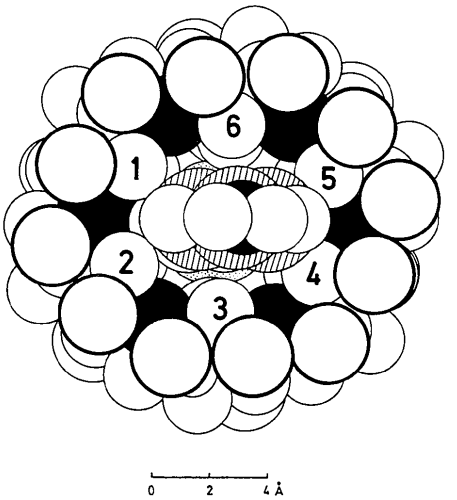

Fig. 4. A space filling plot of the α-CD–*p*-iodoaniline complex. Hydroxyl O(2), O(3) are drawn with heavy contours, N and O(4) as solid circles, H with light contours. I atoms and benzene C atoms are indicated by stippling and hatching, respectively. Hydroxyl H atoms were not located and are omitted. Van der Waals radii are 1·2 Å for H, 1·4 Å for O, 1·3 Å for N, 2·15 Å for I, 1·85 Å for aromatic C (Pauling, 1960).

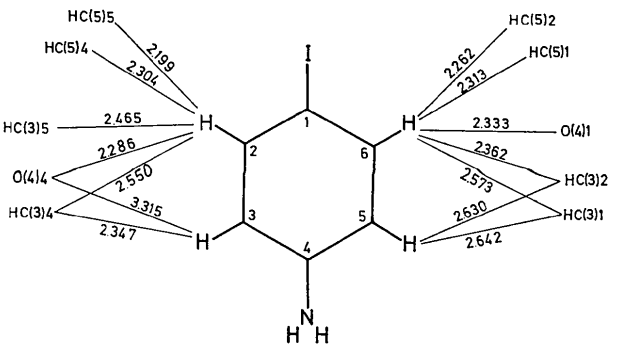

Fig. 5. Nearest neighbours to the H atoms attached to the aromatic nucleus in order to demonstrate the tight fitting between the *p*-iodoaniline and α-CD molecules. All distances in Å units. Note that the H···O(4) distances at 2·286 and 2·333 Å are both shorter than the 2·6 Å for ideal van der Waals contact.

ously, C(1)–O(5) and C(1)–O(4) are shorter than C(5)–O(5) and C(4)–O(4) and C(3)–C(4)–O(4), C(2)–C(1)–O(4) and C(6)–C(5)–O(5) are smaller than tetrahedral (Manor & Saenger, 1974).

The glucose units are in an almost ideal *C*1 chair conformation with the endocyclic dihedral angles given in Table 4. These angles do not differ in an obvious

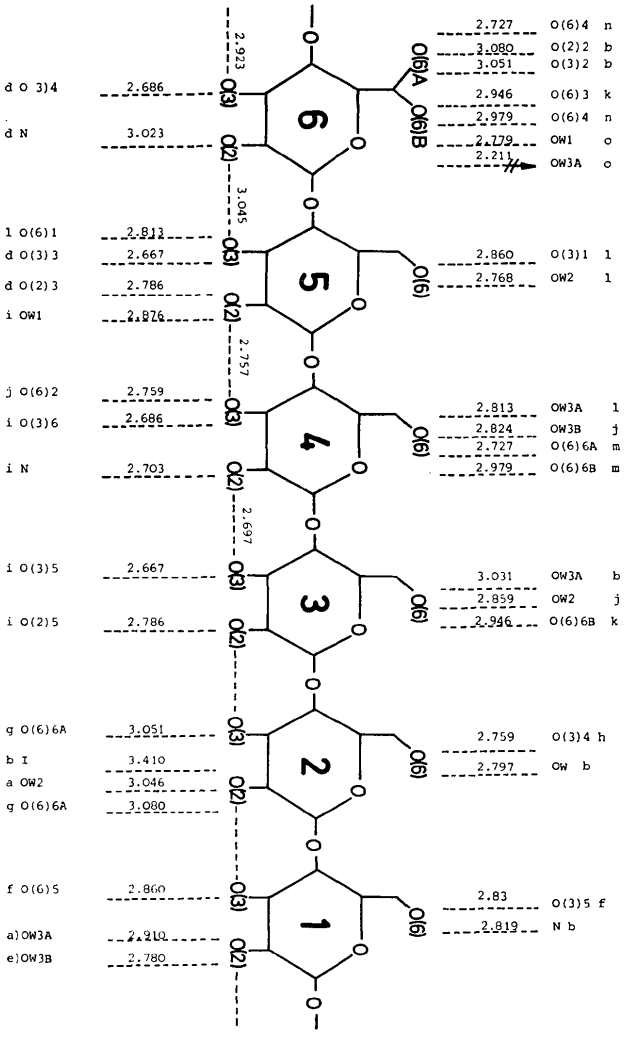

Fig. 6. A schematic representation of the hydrogen bonds in the α-CD–*p*-iodoaniline complex. All O···O and O···N distances less than 3·1 Å are presented, short distances to the ether-like O(4) and O(5) are omitted. Symmetry operations: (*a*) x,y,z. (*b*) $\frac{1}{2}-x,\bar{y},\frac{1}{2}+z$. (*c*) $\frac{1}{2}+x,\frac{1}{2}-y,\bar{z}$. (*d*) $-x,\frac{1}{2}+y,\frac{1}{2}-z$. (*e*) $x,\frac{1}{2}-y,1-z$. (*g*) $\frac{1}{2}-x,\bar{y},-\frac{1}{2}+z$. (*h*) $\frac{1}{2}+x,-\frac{1}{2}-y,1-z$. (*i*) $-x,-\frac{1}{2}+y,\frac{1}{2}-z$. (*j*) $-\frac{1}{2}+x,-\frac{1}{2}-y,1-z$. (*k*) $x,-1-y,z$. (*l*) $-\frac{1}{2}+x,\frac{1}{2}-y,1-z$. (*m*) $-x,-\frac{1}{2}+y,\frac{3}{2}-z$. (*n*) $-x,\frac{1}{2}+y,\frac{3}{2}-z$. (*o*) $\frac{1}{2}-x,1-y,\frac{1}{2}+z$.

systematic manner from the dihedral angles published for other structures of α-CD complexes and the variations within the six glucoses are similar to the variations observed earlier (Saenger, 1975). The least-squares planes through C(2), C(3), C(5), O(5) of the six glucoses (Table 5) demonstrate that the glucoses in the present complex are strained to some extent: on average C(1) and C(4) are closer to these planes by about 0·04 Å than in other α-CD structures (Saenger, 1975) and especially glucose 4 appears strained as here the distances of C(1) and C(4) from the least-squares plane are only 0·592 and 0·546 Å respectively.

(*b*) *p-Iodoaniline*

The *p*-iodoaniline molecule exhibits no extraordinary features. Its geometry, Fig. 2 and Table 6, is as expected and in agreement with data obtained for the same molecule complexed with *s*-trinitrobenzene (Powell, Huse & Cooke, 1943).

(*c*) *The α-CD macrocycle*

The α-CD molecule assumes an almost hexagonal structure in the complexes with iodine, propan-1-ol, krypton, methanol, and butyric acid (Saenger, 1975). In these structures, the diagonals connecting O(4) atoms average 8·49 ± 0·09 Å and the distances between adjacent O(4) atoms in the O(4) hexagon are 4·25 ± 0·05 Å. In the present complex the O(4) hexagon is distorted in a systematic manner: The longest diagonal [O(4)1···O(4)4] at 8·842 Å is in the direction of the benzene plane (Fig. 3) and paralleled by the longest distances between adjacent O(4) atoms, 4·435 and 4·348 Å, suggesting that the included aromat has distorted the O(4) hexagon elliptically.

Inspection of the distances of the O(4) atoms from the least-squares planes through (*a*) the six O(4) atoms and (*b*) O(4)1, O(4)3, O(4)4 and O(4)6 reveals that the O(4) atoms are arranged in a boat form: while O(4)1, O(4)3, O(4)4, O(4)6 are almost coplanar, O(4)2 and O(4)5 deviate by 0·205 and 0·164 Å in a sense directed away from the O(6) side of the α-CD molecule (Table 6). This distortion is indicated by arrows in Fig. 1(*b*).

Despite this slight distortion, the atoms of the O(4)

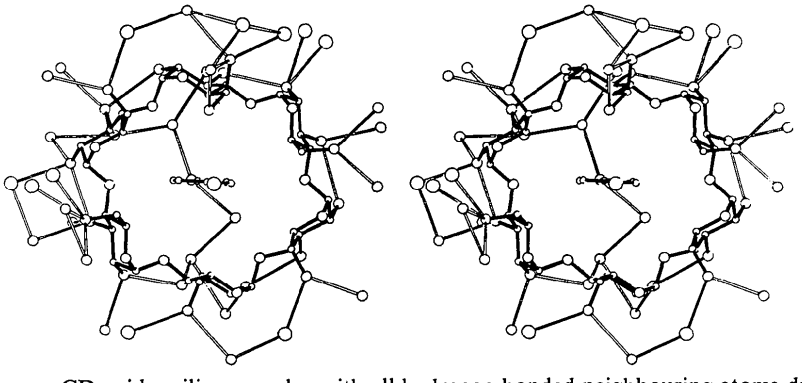

Fig. 7. A stereo plot of one α-CD–*p*-idoaniline complex with all hydrogen-bonded neighbouring atoms drawn. Hydrogen bonds are indicated by double lines (Johnson, 1965).

hexagon and the atoms of the O(2), O(3) hydroxyl groups are surprisingly coplanar [Table 6(*a*), (*c*)], the maximum deviations from these planes being only 0·046 and 0·081 Å. This regularity of the α-CD ring is also expressed by the almost constant interglucosidic dihedral angles φ [O(4)···C(1)–O(4′)–C(4′)] and φ' [C(1)–O(4′)–C(4′)···C(1′)] (Table 7) and is obvious from inspection of Fig. 1(*a*): all the glucose chairs are tilted towards the viewer at about the same angle.

Table 7. *Dihedral angles φ,φ' to describe the rotation of connected glucoses about the common* C(1)–O(4′)–C(4′) *linkage*

For definition, see legend to Table 4 and the drawing.

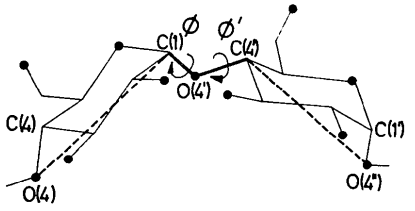

Angle φ O(4)···C(1)–O(4′)–C(4′) between glucoses	
1–2	163·8
2–3	165·1
3–4	163·9
4–5	177·3
5–6	173·2
6–1	163·6

Angle φ', C(1)–O(4′)–C(4′)···C(1′) between glucoses	
1–2	−169·7
2–3	−169·3
3–4	−175·7
4–5	−172·3
5–6	−171·6
6–1	−163·9

Owing to this regular α-CD hexagon, O(2)···O(3) hydrogen bonds between adjacent glucoses are formed: the O(2)···O(3) distances are less than 3·2 Å (Figs. 6, 7). That indeed this ring of hydrogen bonds exists could be shown in the α-CD–methanol complex where all the hydroxyl H atoms were located (Hingerty & Saenger, 1975).

(*d*) *The p-iodoaniline inclusion*

The fitting of the *p*-iodoaniline molecule within the α-CD cavity is demonstrated in Fig. 4. The closest contacts are between H atoms attached to C(2) and C(6) of the benzene ring, the nearest O(4) atoms, and HC(3), HC(5), with which the α-CD cavity is lined (Fig. 5). It is surprising that HC(2)···O(4)4 and HC(6)···O(4)1 distances at 2·286 and 2·333 Å occur, both of which are shorter than the ideal van der Waals distance of 2·6 Å. Owing to this tight fit between the two molecules, further penetration of the *p*-iodoaniline molecule into the α-CD void appears unlikely.

p-Iodoaniline is polar; the amino group is hydrophilic and the rest of the molecule mainly hydrophobic. In all the α-CD structures studied so far with polar guest molecules (potassium acetate, propan-1-ol, methanol, butyric acid, water) one or two of the O(6) hydroxyl groups are engaged in hydrogen bonding to the hydrophilic group of the guest molecule. Therefore, it was expected that *p*-iodoaniline would also be involved in hydrogen bonding of the type – NH_2···H –O(6).

However, this type of hydrogen bonding does not occur because the *p*-iodoaniline molecule is positioned 'upside down' within the α-CD cavity, the I atom being close to the O(6) side of the α-CD ring and the amino group protuding from the O(2), O(3) side by about 1·6 Å [Table 6(*c*)]. A reason for this unexpected position could be a specific iodine–α-CD interaction. A comparison of the distances of I atoms from the least-squares planes through the six O(4) atoms in several I-containing α-CD complexes shows that indeed the I

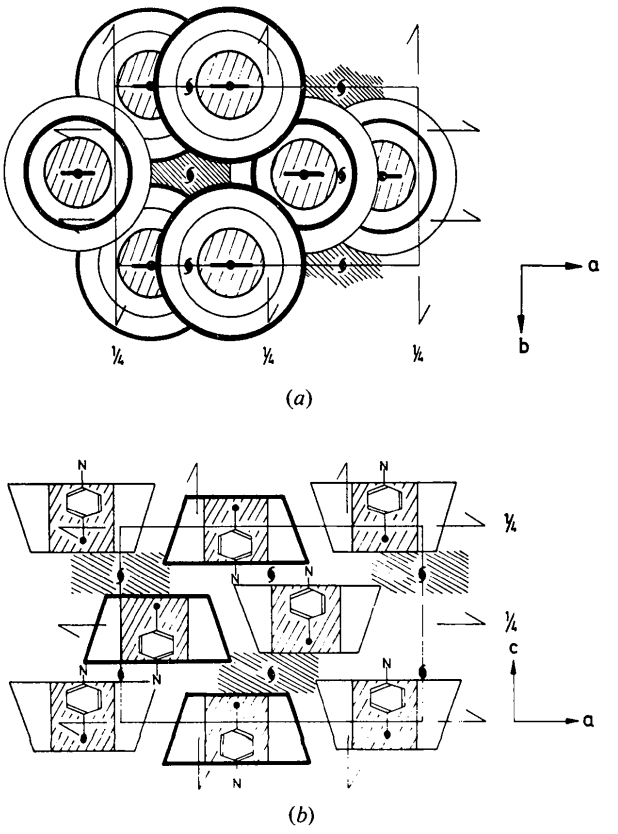

Fig. 8. A schematic drawing of the packing pattern of α-CD–*p*-iodoaniline adducts in the crystal. Two cages, one intramolecular and filled with substrate molecules, the other intermolecular and filled with hydration water molecules, are indicated by light and dense hatching. In (*a*) the outer contour circles represent the O(2), O(3) rim of the α-CD molecules while the middle circles represent the O(6) rim. Heavily drawn circles show that the corresponding rim is towards the viewer. In (*b*) molecules drawn with heavy lines are closer to the viewer than molecules in light lines.

atoms are at similar locations within the α-CD cavity. The O(4) plane···I distance in α-CD–*p*-iodoaniline is 2·125, in the α-CD–iodine complex it is 2·220, in the $(\alpha\text{-CD})_2.LiI_3.I_2.8H_2O$ complex it is 2·695 and 2·721 Å.

Another interpretation of the 'upside down' orientation could be given on purely geometrical grounds coupled with gain of energy through hydrophobic interactions. In order to form $NH_2\cdots HO(6)$ hydrogen bonds the *p*-iodoaniline molecule should be rotated by 180°. If that is done one finds that the amino group is positioned near the plane defined by C(5), O(5) of the α-CD molecule (Fig. 1). Comparison with other adducts exhibiting guest – OH···HO(6)–α-CD hydrogen bonding shows that the hydroxyl groups of the guest molecules are located near the plane through the C(6) atoms of the encaging α-CD molecule. If the amino group of *p*-iodoaniline were in a similar position it would have to move by about 1·5 Å towards the O(6) side, *i.e.* the benzene ring should penetrate further into the cavity. This, however, is prohibited by the close contacts between the aromatic protons and the α-CD ring as mentioned above [Figs. 4(*a*), (*b*)].

Moreover, if the *p*-iodoaniline molecule is located within the α-CD cavity with the amino group near the C(6), O(6) side of the molecule, then the hydrophobic I atom protudes from the O(2), O(3) side into the surrounding water. This, however, is disadvantageous for the formation of a hydration shell around the complex. Clearly, it is far better to hide the hydrophobic I atom within the hydrophobic α-CD cavity and to let the amino group protude from the O(2), O(3) side to support the formation of a hydration shell around the complex (Cramer, Saenger & Spatz, 1967).

From Fig. 1 it appears most likely that the *p*-iodoaniline molecule has entered the α-CD cavity from the O(2), O(3) side because the O(6) side is too narrow. Previously the approach of the substrate molecules to the α-CD cavity from the O(2), O(3) side has been postulated for long, narrow molecules with a functional group suitable for hydrogen bonding with the α-CD O(6) hydroxyls (Saenger, 1975). It might well be that the *p*-iodoaniline molecule enters the α-CD cavity statistically with the amino and the I side head-on but one of the complexes is thermodynamically more stable than the other owing to the hydrophobic forces and crystallizes out.

Molecular packing

The packing of the α-CD–*p*-iodoaniline adducts in the crystal is drawn schematically in Fig. 8. This pattern corresponds to a cage-type structure as the opening of one α-CD molecule is blocked by the rims of contiguous molecules arranged in an opposite, face-to-face orientation. Other cage type structures have been observed in the adducts of α-CD with iodine, methanol, propan-1-ol, water, krypton.

The packing pattern found for the present complex is similar to the 'class 2A' channel structures described by McMullan, Saenger, Fayos & Mootz (1973*b*). These adducts have space groups $P2_12_12$ or $P2_12_12_1$ and cell dimensions $a=22$, $b=16{\cdot}5$, $c=8{\cdot}3$ or 16·6 Å and 'volumes per inclusion complex unit' of about 1500 Å^3. In the present complex the cell constants are changed in a by 2·5, in b by −2·6, and in c by −1·1 for the 16·6 Å unit. The differences in a and b cause a displacement of the α-CD molecules which obviously disrupts the continuous channel and subdivides it into several small, isolated cages. With the change in cell constants the 'volume per inclusion complex unit' is decreased by 200 Å^3.

The opposite, face-to-face type cage has not been found previously. This type of arrangement will be preferred when molecular guests are included which are just too big to be accommodated in the smaller cages of the crosswise, fishbone-like pattern.

As indicated by the different hatching in Fig. 8 there exist two types of cages, one is intramolecular, formed by the α-CD cavity and occupied by the *p*-iodoaniline molecules, while the other is intermolecular, formed by open space between the α-CD molecules and filled with the three hydration water molecules.

The hydrogen-bonding scheme is shown schematically in Fig. 6 and in a stereo view (Fig. 7). Contiguous molecules are linked through hydrogen bonds O(2)3···O(2)5; O(3)3···O(3)5; O(3)4···O(3)6 at the O(2), O(3) side and through O(6)3···O(6)6*B*; O(6)4···O(6)6*A*,O(6)6*B* at the O(6) side. The *p*-iodo-aniline molecule forms – $NH_2\cdots$O(2)4 and –$NH_2\cdots$O(6)1 hydrogen bonds to symmetry relatedα-CD molecules, *not* to the enclosing α-CD molecule. The hydrate water molecules serve to fill the open space between the α-CD toruses. One of the three water molecules is located on a twofold screw axis (O*W*1) and one is twofold disordered (O*W*3*A* and O*W*3*B*) with the occupancies given in the legend to Table 2. Simultaneous occupation of atomic sites O*W*3*A* and O*W*3*B* is impossible as in this case a close contact of only 1·590 Å would result. Also, atomic sites O*W*3*A* and O(6)6*B* are excluded from simultaneous occupation as here the distance would be only 2·211 Å. Therefore, O(6)4 can be hydrogen-bonded simultaneously either as O(6)4···O*W*3*A*,O(6)6*A* or O(6)4···O*W*3*B*, O(6)6*B* (Fig. 6).

The authors gratefully acknowledge the interest of Professor F. Cramer in these studies. Computing facilities were provided in part by the Deutsche Forschungsgemeinschaft.

References

Busing, W. R., Martin, K. O. & Levy, H. A. (1962). *ORFLS*. Oak Ridge National Laboratory Report TM-305.

Cramer, F. (1954). *Einschlussverbindungen*. Heidelberg: Springer.

Cramer, F., Saenger, W. & Spatz, H.-C. (1967). *J. Amer. Chem. Soc.* **89**, 14–20.

FRENCH, D. (1957). *Advanc. Carbohydr. Chem.* **12**, 189–260.
GRIFFITHS, D. W. & BENDER, M. L. (1973). *Advanc. Catal.* **23**, 209–261.
HARATA, K. & UEDAIRA, H. (1975). *Nature, Lond.* **253**, 190–191.
HINGERTY, B. & SAENGER, W. (1975). *Nature, Lond.* **255**, 396–397.
JOHNSON, C. K. (1965). *ORTEP*. Oak Ridge National Laboratory Report ORNL-3794.
MCMULLAN, R. K., SAENGER, W., FAYOS, J. & MOOTZ, D. (1973*a*). *Carbohydr. Res.* **31**, 211–227.
MCMULLAN, R. K., SAENGER, W., FAYOS, J. & MOOTZ, D. (1973*b*). *Carbohydr. Res.* **31**, 37–46.
MAIN, P., GERMAN, G. & WOOLFSON, M. M. (1970). *MULTAN - a System of Computer Programs for the Solution of Non-centrosymmetric Crystal Structures*, York/Louvain.
MANOR, P. C. & SAENGER, W. (1974). *J. Amer. Chem. Soc.* **96**, 3630–3639.
NOLTEMEYER, M. & SAENGER, W. (1975). To be published.
NORTH, A. G. T., PHILLIPS, D. C. & MATTHEWS, F. S. (1968). *Acta Cryst.* A**24**, 351–359.
PAULING, L. (1960). *The Nature of the Chemical Bond.* Ithaca: Cornell Univ. Press.
POWELL, H. M., HUSE, G. & COOKE, P. W. (1943). *J. Chem. Soc.* pp. 153–156.
SAENGER, W. (1975). In *Environmental Effects on Molecular Structure and Properties, The Jerusalem Symposia on Quantum Chemistry and Biochemistry*, VIII, edited by E. D. BERGMANN & B. PULLMAN, The Israel Academy of Sciences and Humanities, Jerusalem.
SAENGER, W. & BEYER, K. (1975). To be published.
SAENGER, W., MCMULLAN, R. K., FAYOS, J. & MOOTZ, D. (1974). *Acta Cryst.* B**30**, 2019–2028.
SAENGER, W. & NOLTEMEYER, M. (1974). *Angew. Chem. Int. Ed.* **13**, 552–553.
STOUT, G. H. & JENSEN, L. H. (1968). *X-ray Structure Determination.* New York: Macmillan.

Acta Cryst. (1976). B**32**, 128

O.r.d. Studies of β-Amino Ketones. IV.* The Crystal Structure and Absolute Configuration of (+)-[1,3-Dimethyl-3-benzoylpiperidine Methiodide]

BY J. R. RUBLE

Department of Crystallography, University of Pittsburgh, Pittsburgh, Pennsylvania 15260, *U.S.A.*

AND G. HITE† AND J. R. SOARES

Section of Medical Chemistry and Pharmacognosy, University of Connecticut, School of Pharmacy, Storrs, Connecticut 06268, *U.S.A.*

(*Received* 5 *September* 1974; *accepted* 22 *May* 1975)

(+)-[1,3-Dimethyl-3-benzoylpiperidine methiodide], $C_{15}H_{22}NOI$, crystallizes in space group $P2_1$, with unit-cell dimensions $a = 10{\cdot}977(5)$, $b = 7{\cdot}734(4)$, $c = 9{\cdot}502(4)$ Å and $\beta = 96{\cdot}94(3)°$. There are two molecules per unit cell giving $D_x = 1{\cdot}489$ and $D_m(CCl_4\text{–}C_6H_6) = 1{\cdot}495$ g cm^{-3}. The structure was solved by the heavy-atom method. The positional and thermal parameters were refined by full-matrix procedures, converging at $R = 0{\cdot}071$. The *S* configuration was established on the basis of anomalous scattering. The benzoyl group is axial. The O–C(8)–C(3)–C(2) torsion angle is $-24°$. The absolute configuration and conformation observed, taken together with the o.r.d. data, are consistent with octant behavior. Precedented conformational considerations and o.r.d. data for the corresponding protonated tertiary amine salt are consistent with antioctant behavior.

Introduction

This study was undertaken as part of an investigation of the optical rotatory dispersion (o.r.d.) characteristics (Djerassi, 1960) of β-amino ketones (Hudec, 1970). β-Amino ketones in this series [*cf.* (I)] have shown solvent-dependent sign inversion of the Cotton effect curve (CEC) in going from octane to aqueous acid solutions (Smissman & Hite, 1960; Hite & Soares, 1973). This was interpreted in terms of solvent-dependent rotation about the C(3)–C(8) acyl-to-ring bond (Smissman & Hite, 1960; Djerassi, 1960; Djerassi & Geller, 1958; Djerassi, Fournaguera & Mancera, 1959). However, (I) and its protonated salt exhibit positive CEC's (Soares, 1971) in octane and water, respectively. This unexpected behavior of (I) prompted an investigation of its absolute configuration and conformation. Inability to obtain a crystallographically suitable protonated salt of (I) with a structurally simple counterion as well as our interest in the o.r.d. behavior of quaternary salts of compounds in this series and the fact that all protonated salts in this series examined to date afford Cotton effect curves of the same sign as the configurationally identical quaternary salts, led to our choice of (I) methiodide (II), which is related in an

* Part III: Soares & Hite (1975).
† To whom inquiries should be addressed.